9 - 01 - 01

TRAVELED WAY WIDTH | SHOULDER WIDTH | GUARDRAIL OFFSET

SAMPLE
FOR USE AS A GUIDE ONLY

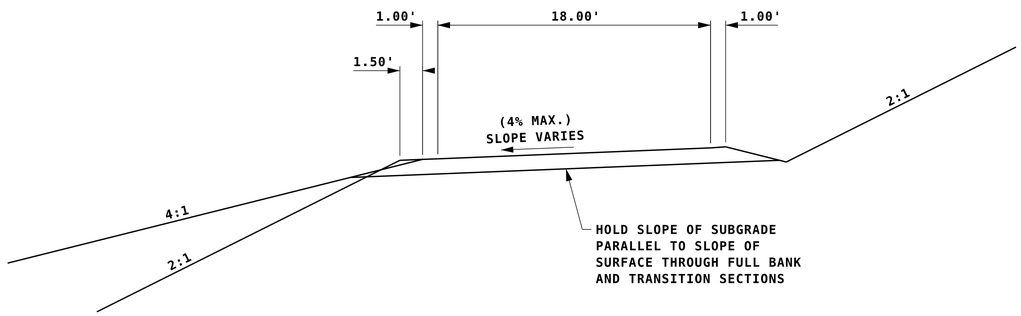

SUPERELEVATED SECTION

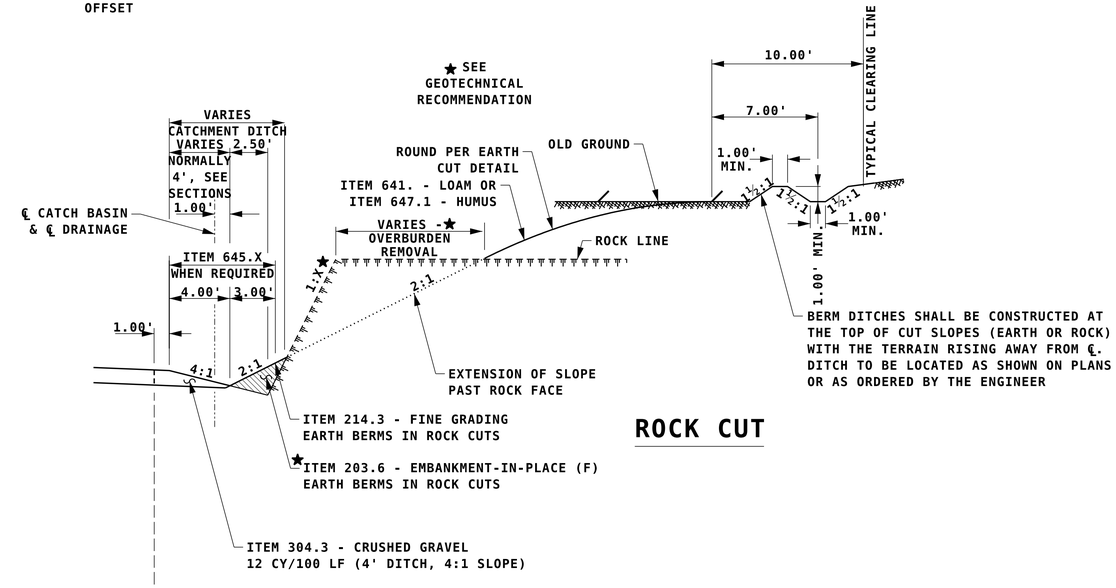

ROCK CUT

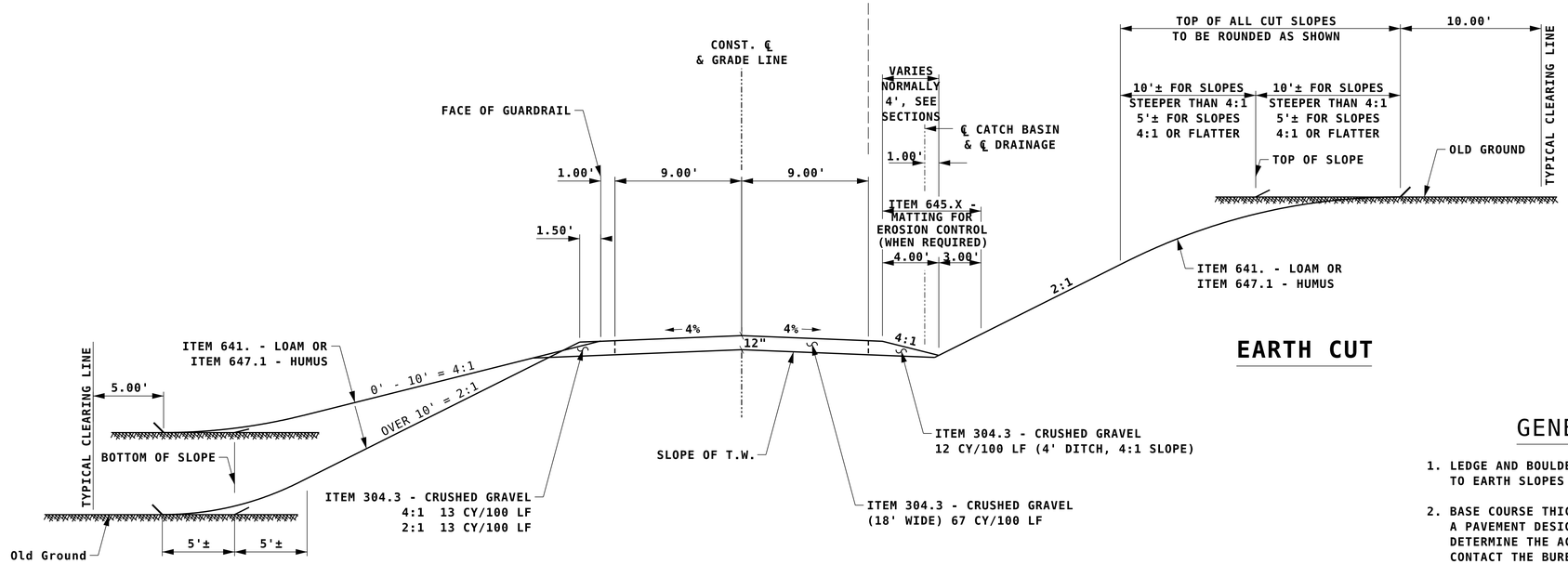

EARTH CUT

EARTH FILL

GENERAL NOTES

1. LEDGE AND BOULDER OUTCROPS SHALL BE REMOVED TO EARTH SLOPES WHEN ORDERED BY THE ENGINEER.
2. BASE COURSE THICKNESS SHOWN FOR GUIDANCE ONLY. A PAVEMENT DESIGN SHOULD BE PERFORMED TO DETERMINE THE ACTUAL REQUIRED BASE COURSE. CONTACT THE BUREAU OF MATERIALS & RESEARCH FOR MORE INFORMATION.

NUMBER	DATE	STATION	DESCRIPTION

REVISIONS AFTER PROPOSAL

SDR PROCESSED	NAME1	DATE	DATE1
NEW DESIGN	NAME2	DATE	DATE2
SHEET CHECKED	NAME3	DATE	DATE3
AS BUILT DETAILS		DATE	

STATE OF NEW HAMPSHIRE
SAMPLE
DEPARTMENT OF TRANSPORTATION ○ BUREAU OF HIGHWAY DESIGN

9-1-1 TYPICAL SECTION

	REVISION DATE	DGN	STATE PROJECT NO.	SHEET NO.	TOTAL SHEETS
DM_9-01-TYP	08/22/2019	dm-09-01-typ	12345	1	9